OD8025 Series

DC Fan - 5, 12, 24, 48V
80x25 (3.15"x 1.00")

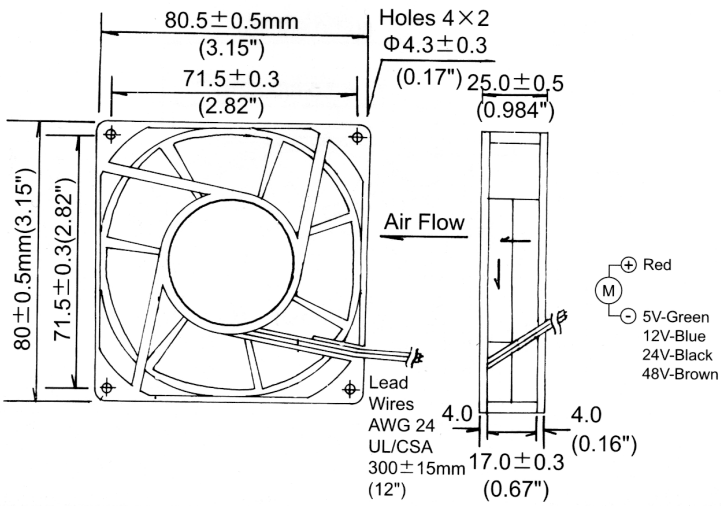

Frame & Impeller	PBT, UL94V-O plastic
Connection	2x Lead wires 24AWG
Motor	Brushless DC, auto restart, polarity protected
Bearing System	Dual Ball or Sleeve
Insulation Resistance	10M ohm between leadwire and frame (500VDC)
Dielectric Strength	1 second at 500 VAC, max leakage - 500 MicroAmp
Storage Temperature	-30C ~ +90C

Available Options:
Tachometer (FG)
Alarm (RD)

Life Expectancy (L10)
Ball Bearing
60,000 hours (L10 at 40C)
Sleeve Bearing
30,000 hours (L10 at 40C)

Operating Temperature
Ball Bearing
-20C ~ +80C
Sleeve Bearing
-10C ~ +50C

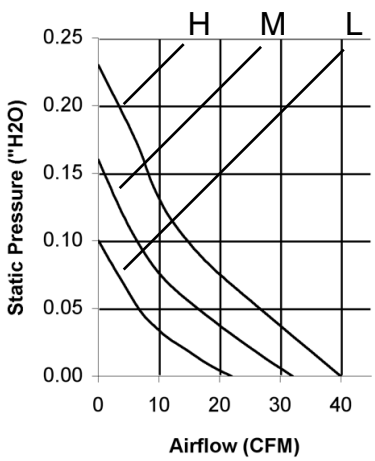

Model Number	Speed (RPM)	Airflow (CFM)	Noise (dB)	Volts DC	Voltage Range	Amps	Max. Static Pressure ("H2O)
OD8025-05H*	2800	35	32	05	4~7	0.28	0.22
OD8025-05M*	2200	30	27	05	4~7	0.20	0.16
OD8025-05L*	1800	22	21	05	4~7	0.15	0.10
OD8025-12H*	3300	40	33	12	7~17	0.18	0.23
OD8025-12M*	2800	32	28	12	7~17	0.15	0.16
OD8025-12L*	2000	22	21	12	7~17	0.12	0.10
OD8025-24H*	3300	40	33	24	12~28	0.12	0.23
OD8025-24M*	2800	32	28	24	12~28	0.10	0.16
OD8025-24L*	2000	22	21	24	12~28	0.08	0.10
OD8025-48HB	4200	42	33	48	32~56	0.05	0.25

* Indicate "B" to specify Ball bearing or "S" to specify Sleeve bearing