OD6025 Series

05, 12, 24, 48V DC Fan
60x25mm (2.36"x 1.0")

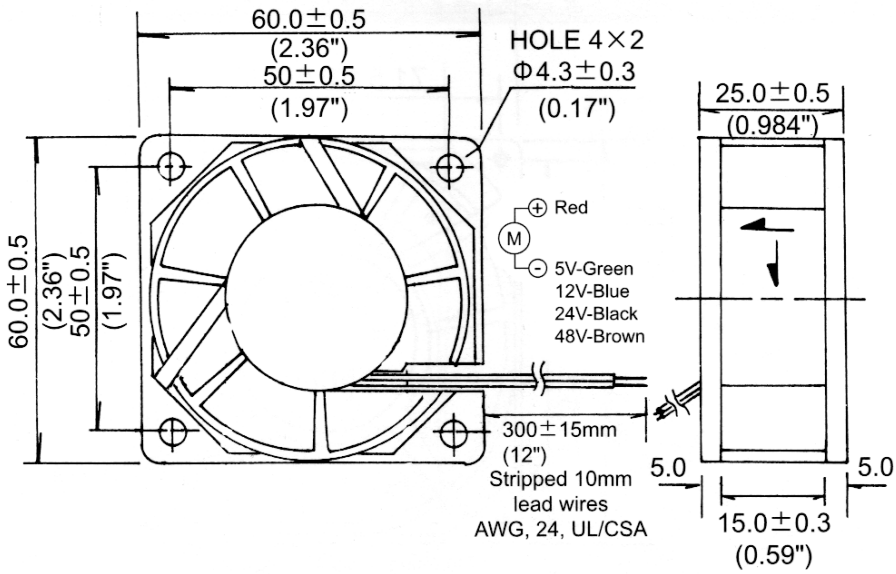

Frame & Impeller	PBT, UL94V-O plastic
Connection	2x Lead wires 24AWG
Motor	Brushless DC, auto restart, polarity protected
Bearing System	Dual ball bearing
Insulation Resistance	10M ohm between leadwire and frame (500VDC)
Dielectric Strength	1 second at 500 VAC, max leakage - 500 MicroAmp
Temperature Range	-10C ~ +70C
Life (L10)	65,000 hours (45C)

Available Options:

Tachometer (Frequency Generator) White Lead

Alarm (Rotation Detector) Yellow Lead

Sleeve bearing available on request. (Replace "B" with "S" in part number)

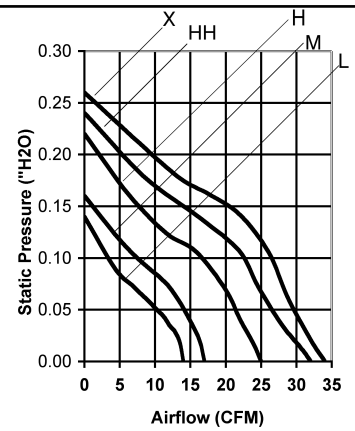

Model Number	Speed (RPM)	Airflow (CFM)	Noise (dB)	Volts DC	Voltage Range	Amps	Max. Static Pressure (ìH$_2$O)
OD6025-05HB	3600	25	30	05	4~6	0.32	0.22
OD6025-05MB	3200	20	26	05	4~7	0.24	0.17
OD6025-05LB	2800	15	21	05	4~7	0.17	0.14
OD6025-05LLB	2000	12	18	05	4~7	0.12	0.10
OD6025-12HXB	5500	38	34	12	7~17	0.29	0.26
OD6025-12HHB	4400	32	32	12	7~17	0.21	0.24
OD6025-12HB	4000	25	30	12	7~17	0.15	0.22
OD6025-12MB	3200	17	25	12	7~17	0.12	0.16
OD6025-12LB	2500	14	20	12	7~17	0.08	0.14
OD6025-24HXB	5500	38	34	24	12~28	0.18	0.26
OD6025-24HHB	4400	32	32	24	12~28	0.15	0.24
OD6025-24HB	4000	25	30	24	12~28	0.12	0.22
OD6025-24MB	3000	17	25	24	12~28	0.09	0.16
OD6025-24LB	2500	13	20	24	12~28	0.08	0.14
OD6025-48HXB	5500	38	33	48	28~52	0.11	0.26
OD6025-48HHB	4400	32	32	48	28~52	0.10	0.24
OD6025-48HB	4200	28	30	48	28~52	0.07	.24