OD4020 Series

DC Fan - 5, 12, 24V
40x20mm (1.58"x 0.79")

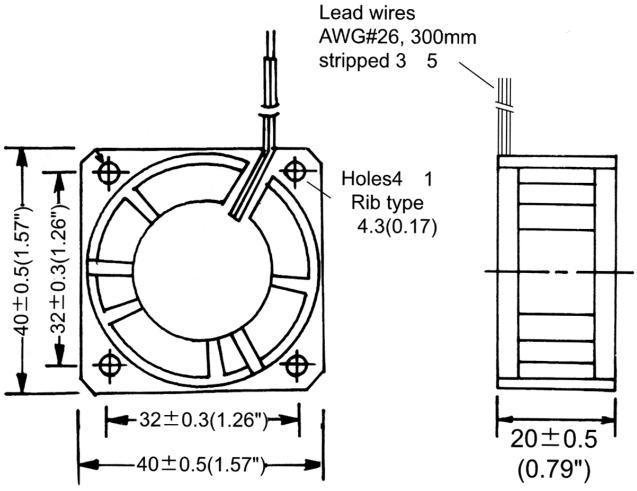

Frame & Impeller	PBT, UL94V-O plastic
Connection	2x Lead wires 26AWG
Motor	Brushless DC, auto restart, impedance and polarity protected
Bearing System	Ball bearing or Sleeve
Insulation Resistance	10M ohm between leadwire and frame (500VDC)
Dielectric Strength	1 second at 500 VAC, max leakage - 500 MicroAmp
Storage Temperature	-30C ~ +90C

Available Options:

Tachometer (Frequency Generator) White Lead

Alarm (Rotation Detector) Yellow Lead

Life Expectancy (L10)
Ball - 60,000 hrs (45C)
Sleeve - 30,000 hrs (45C)

Operating Temperature
Ball: -20 ~ 80C
Sleeve: -10 ~ 60C

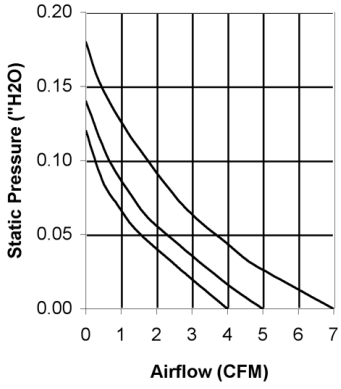

Model Number	Speed (RPM)	Airflow (CFM)	Noise (dB)	Volts DC	Voltage Range (VDC)	Amps	Max. Static Pressure ("H2O)
OD4020-05H *	6000	7	30	5	4~7	0.12	0.17
OD4020-05M *	5000	5	24	5	4~7	0.10	0.14
OD4020-05L *	4000	4	20	5	4~7	0.09	0.12
OD4020-12H *	7000	7	30	12	7~14	0.08	0.18
OD4020-12M *	5500	5	24	12	7~14	0.07	0.14
OD4020-12L *	4500	4	20	12	7~14	0.06	0.12
OD4020-24H *	7000	7	30	24	10~27	0.06	0.18
OD4020-24M *	5500	5	24	24	10~27	0.05	0.14
OD4020-24L *	4500	4	20	24	10~27	0.04	0.12

* Indicate "B" for ball bearing or "S" for sleeve bearing