OD1238 'Rigel Series'

DC Fan - 12, 24, 48V
120x38mm (4.7"x 1.5")

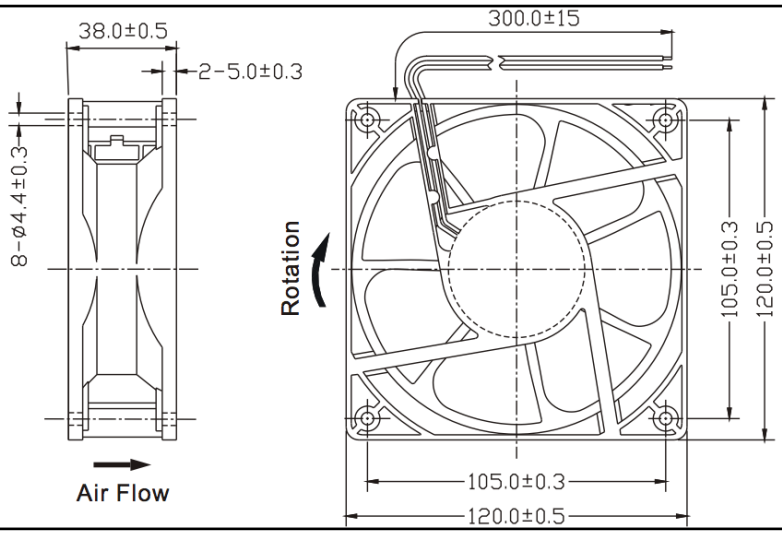

Frame & Impeller	PBT, UL94V-O plastic
Connection	2x Lead wires 22AWG
Motor	Brushless DC, auto restart, impedance and polarity protected
Bearing System	Dual ball bearing
Insulation Resistance	10M ohm between leadwire and frame (500VDC)
Dielectric Strength	1 second at 500 VAC, max leakage - 500 MicroAmp
Temperature Range	-20C ~ +75C
Life (L10)	65,000 hours (45C)

Available Options:

Tachometer (Frequency Generator) White Lead

Alarm (Rotation Detector) Yellow Lead

Thermistor (Thermal Speed Control) Orange Lead or hub mounted

PWM Input (Pulse Width Modulation Speed Control) Blue Lead

Constant Speed (Variable voltage input)

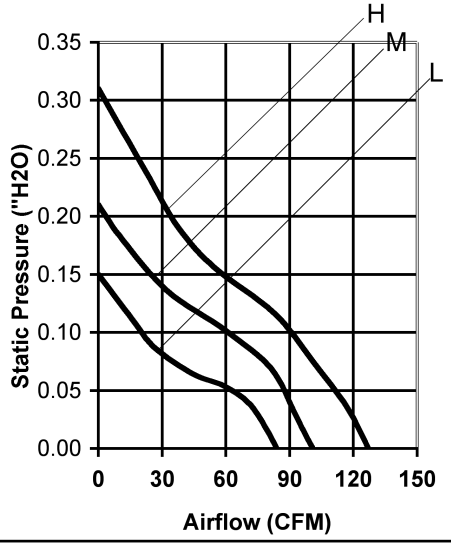

Model Number	Speed (RPM)	Airflow (CFM)	Noise (dB)	Volts DC	Voltage Range (VDC)	Amps	Max. Static Pressure ("H2O)
OD1238-12HB	3000	127	47	12	6 ~ 14	0.60	0.31
OD1238-12MB	2400	101	41	12	6 ~ 14	0.40	0.21
OD1238-12LB	2000	84	37	12	6 ~ 14	0.25	0.15
OD1238-24HB	3000	127	47	24	12 ~ 28	0.40	0.31
OD1238-24MB	2400	101	41	24	12 ~ 28	0.30	0.21
OD1238-24LB	2000	84	37	24	12 ~ 28	0.20	0.15
OD1238-48HB	3000	127	47	48	24 ~ 56	0.20	0.31
OD1238-48MB	2400	101	41	48	24 ~ 56	0.15	0.21
OD1238-48LB	2000	84	37	48	24 ~ 56	0.13	0.15

(Sleeve Bearing - Replace suffix "B" with "S" in part number.) Frame style - m3