OA80 Series

AC Fan - 115V, 230V, Dual Voltage
80 x 38mm(3.15" x 1.5")

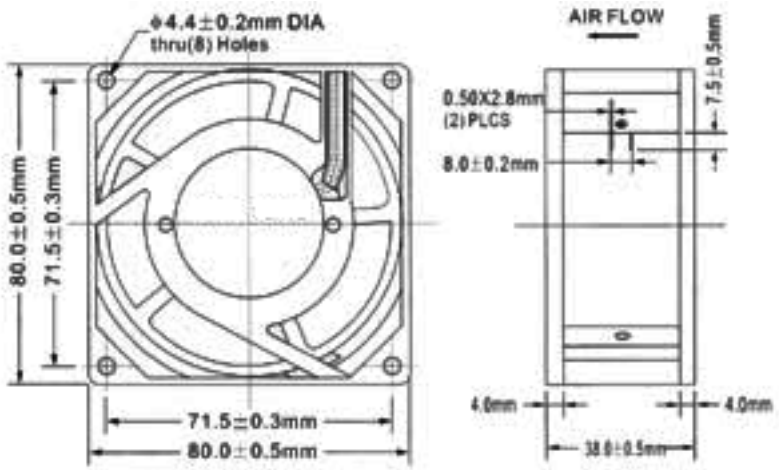

Frame	Diecast Aluminum
Impeller	PBT, UL94V-O plastic
Connection	2x Lead Wires 22 AWG or terminals
Motor	Shaded pole, impedance and thermally protected
Bearing System	Dual ball or Sleeve
Insulation Resistance	>100M ohm between lead-wire and frame (500VDC)
Dielectric Strength	1 min at 1500 VAC, 50/60Hz

Operating Temperature
Ball Bearing
-20C ~ +80C
Sleeve Bearing
-10C ~ +50C

Life Expectancy
Ball Bearing
60,000 hours (L10 at 40C)
Sleeve Bearing
30,000 hours (L10 at 40C)

Dual Voltage
Connection via 4x leads.
Fans can be configured for 115V or 230V operation.

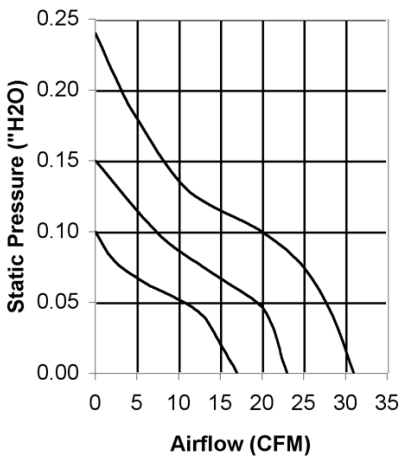

Model Number	Speed (RPM)	Airflow (CFM)	Noise (dB)	Volts AC	Voltage Range	Watts	Max. Static Pressure ("H2O)
OA80AP-11-1*	3000	31	29	115	80~130	12	0.24
OA80AP-11-2*	2300	23	22	115	80~130	9	0.15
OA80AP-11-3*	1600	17	18	115	80~130	5	0.10
OA80AP-22-1*	3000	31	29	230	160~260	12	0.24
OA80AP-22-2*	2300	23	22	230	160~260	9	0.15
OA80AP-22-3*	1600	17	18	230	160~260	5	0.10
OA80AP-11/22-1W**	3000	25	29	115/230	80~260	12	0.24
OA80AP-11/22-2W**	2300	18	22	115/230	80~260	9	0.15
OA80AP-11/22-3W**	1600	13	18	115/230	80~260	5	0.10

** Indicate "TB" (Terminal Ball Bearing), "WB" (12" Wire Leads, Ball Bearing), "TS" (Terminal, Sleeve Bearing), "WS" (12" Wire Leads, Sleeve Bearing)*
*** Indicate "B" (Ball Bearing) or "S" (Sleeve Bearing)*