1. INTRODUCTION Action-Electronics.com 800-563-9405

The earliest and most popular type of resistor is carbon film resistor which can be used in almost all kinds of electronic products. The resistive element is a high grade ceramic rod on which a homogrnous film of pure carbon is deposited by vacuum heating process to pro-duce electricity conductivity on the surface. Fully automation and mass production on capping, sorting, cutting, welding, coating and double-checking which comes out stable quality, high reliability and economic cost for **SYNTON-TECH's** CR series.

2. FEATURES

- Meet requirements of JIS-C-5202 and MIL-R-22684B!
- The most economic industrial investment!
- Quicker dissipation of heat!
- Lower temperature rise!
- Small shelf life drift!

APPROVED	CHECKED	DESIGNED	REMARK	DOCUMENT NO.
Carol	May	Leen		02010100010

3. EXPLANATIONS OF ORDERING CODE

CR	1/4W	5%	100Ω	T
SERIES	POWER	TOLERANCE	RESISTANCE VALUE	PACKAGE

(1) POWER RATING : 1/16W~3W (Please see detail of Figure1)

(2) TOLERANCE : J=± 5%、G=± 2%

(3) RESISTANCE VALUE : Ω、KΩ(10^3Ω)、MΩ(10^6Ω)

(4) PACKAGE : Bulk, Tape in box(Ammopack ,T-26,T-52,T-74), Tape on Reel,Cut-and-Formed and Vertical Panasert/Avisert

4. ELECTRICAL CHARACTERISTICS

TYPE	Power Rating at 70℃	Maximun Working Volt.	Maximun Overload Volt.	Dielectric withstanding Volt.
CR-12	1/6W 1/8W 1/16W	200V	400V	400V
CR-25S	1/4W	250V	500V	500V
CR-25	1/4W	250V	500V	500V
CR-33S	1/3W	300V	500V	500V
CR-50S	1/2W	350V	700V	700V
CR-50	1/2W	350V	700V	700V
CR-100SS	1W	350V	700V	700V
CR-100S	1W	500V	1000V	1000V
CR-100	1W	500V	1000V	1000V
CR-200SS	2W	500V	1000V	1000V
CR-200S	2W	500V	1000V	1000V
CR-200	2W	500V	1000V	1000V
CR-200B	2W	500V	1000V	1000V
CR-300S	3W	500V	1000V	1000V
CR-300	3W	500V	1000V	1000V

Operating Temp. Range	—55℃～＋155℃	
Value Range	STANDARD 1Ω~10MΩ SPECIAL LOW TO 0.05Ω HIGH TO 100MΩ	
Temp. Coefficient	470KΩ以下	0~500PPM/℃
	470KΩ~1MΩ	0~700PPM/℃
	1MΩ~10MΩ	0~1000PPM/℃

Figure 1

Confidential, Do Not Disseminate.

5. POWER RATING

(1)Power Derating : The rated power at the temperature in excess of 70℃ shall be derated in accordance with figure2

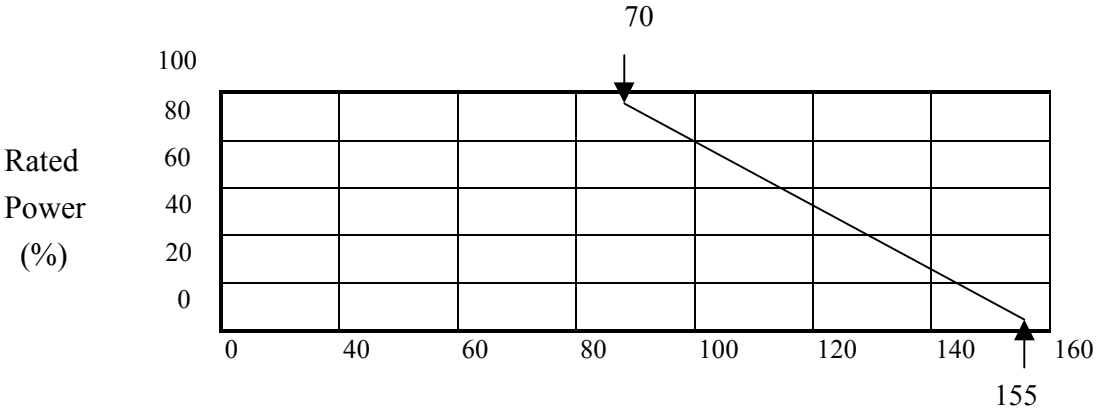

Ambient Temperature (℃)

Figure2

(2)Rated Voltage : The DC or AC(rms) continuous working voltage corresponding to the rated power is determined by the following formula:

$$E = \sqrt{R \times P}$$

Where E : Continuous rated DC or AC (rms) working voltage (v)

P : Rated power (w)

R : Resistance value (Ω)

6. DIMENSIONS

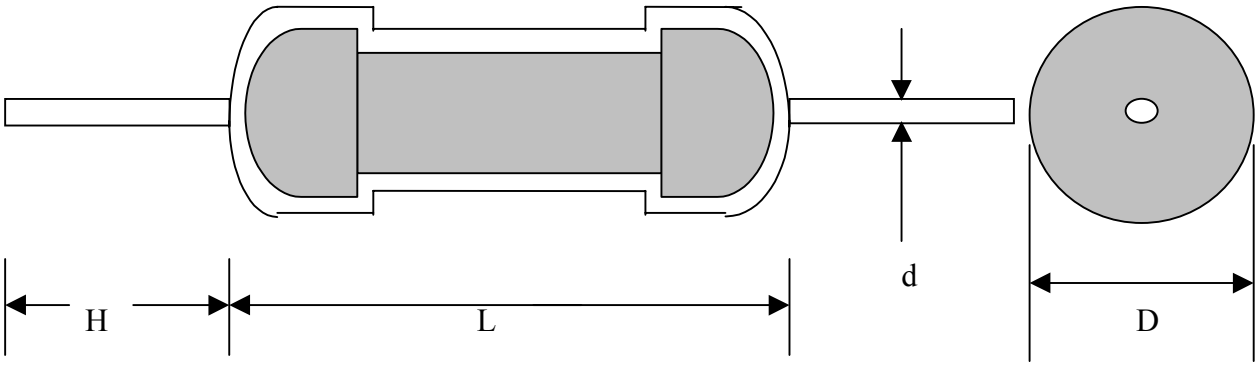

Unit: m/m

TYPE	POWER	L	D	H	d
CR-12	1/16W 1/6W 1/8W	3.5 ± 0.3	1.8 ± 0.3	25 ± 3	0.45 ± 0.05
CR-25S	1/4W				
CR-25	1/4W	6.0 ± 0.5	2.3 ± 0.3	25 ± 3	0.56 ± 0.1
CR-33S	1/3W				
CR-50S	1/2W				
CR-50	1/2W	9.0 ± 0.5	3.2 ± 0.5	25 ± 3	0.60 ± 0.1
CR-100SS	1W	6.0 ± 0.5	2.3 ± 0.5	25 ± 3	0.56 ± 0.1
CR-100S	1W	9.0 ± 0.5	3.2 ± 0.5	25 ± 3	0.60 ± 0.1
CR-100	1W	11 ± 1.0	4.5 ± 0.5	35 ± 3	0.80 ± 0.1
CR-200SS	2W	9.0 ± 0.5	3.2 ± 0.5	25 ± 3	0.60 ± 0.1
CR-200S	2W	11 ± 1.0	4.5 ± 0.5	35 ± 3	0.80 ± 0.1
CR-200	2W	15 ± 1.0	5.0 ± 0.5	35 ± 3	0.80 ± 0.1
CR-200B	2W	17 ± 1.0	6.0 ± 0.5	35 ± 3	0.80 ± 0.1
CR-300S	3W	15 ± 1.0	5.0 ± 0.5	35 ± 3	0.80 ± 0.1
CR-300	3W	17 ± 1.0	6.0 ± 0.5	35 ± 3	0.80 ± 0.1

Figure3

Confidential, Do Not Disseminate.

(1) FORMING PACKING

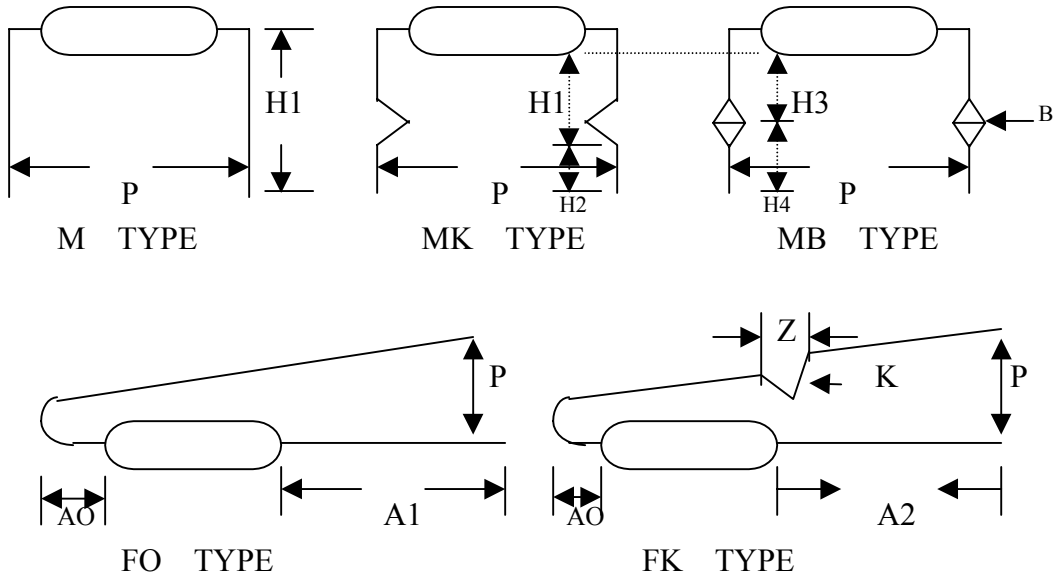

Unit:: m/m

TYPE	POWER	成型 Type	P ± 1 (Min.)	H1 ± 2.5 (Min.)	H2 ± 1 (Min.)	H3 ± 1 (Min.)	H4 ± 1 (Min.)	A1 ± 1 (Min.)	A2 ± 1 (Min.)	A0 ± 1 (Min.)
CR-12 CR-25S	1/16,1/81/6W 1/4W	M	5~	10~	—	—	—	—	—	—
		FO	—	—	—	—	—	25±3	—	3
CR-25 CR-33S CR-50S CR-100SS	1/4W 1/3W 1/2W 1W	M	10~	10~	—	—	—	—	—	
		FK	—	—	—	—	—	—	25±3	3
CR-50 CR-100S CR-200SS	1/2W 1W 2W	M	12.5~	10~	—	—	—	—	—	—
		FK	5~10	—	—	—	—	—	25±3	3
CR-100 CR-200S	1W 2W	M MK.MB	15~	10~	3~	8~	5~	—	—	—
		FK FO	5~10	—	—	—	—	5~	5~	3
CR-200 CR-300S	2W 3W	M MK.MB	20~	10~	3~	8~	5~	—	—	—
		FK FO	5~10	—	—	—	—	5~	5~	3
CR-200B CR-300	2W 3W	M MK.MB	25	10~	3~	8~	5~	—	—	—
		FK FO	5~10	—	—	—	—	5~	5~	3

註 : 1. B = 1.15 ~ Z = 3 ± 1. K = 2 ± 0.5,

2. ***<u>ALTERNATE MARKING METHOD ALSO AVAILABLE ON REQUEST.</u>***

Figure4

Confidential, Do Not Disseminate.

(2) TAPE PACKING (T-TYPE)

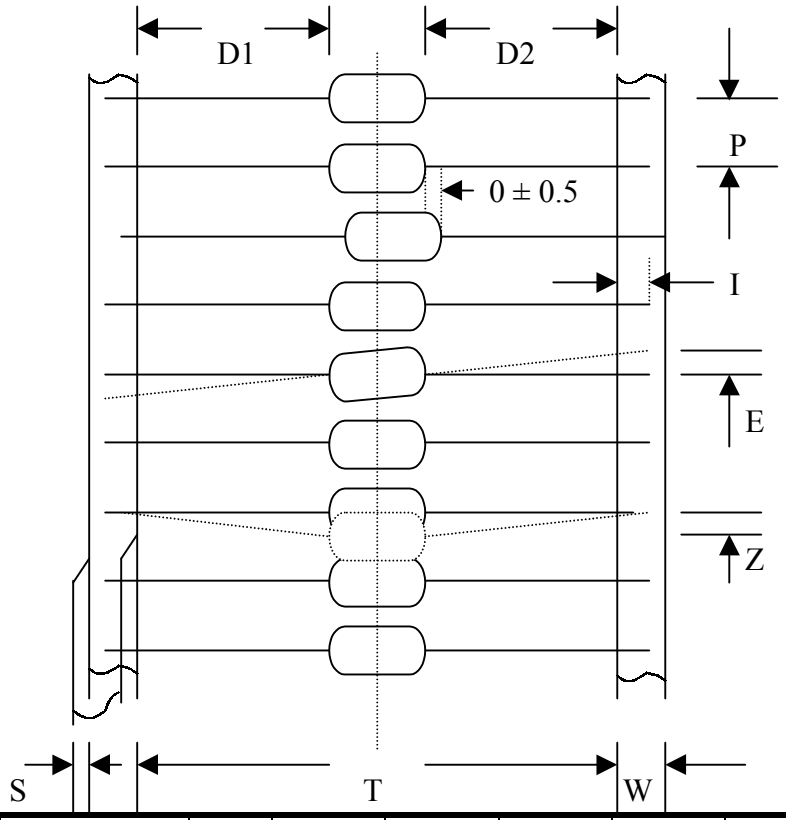

Unit:m/m

TYPE	POWER	SIZE	T	P ± 0.5	W ± 0.5	D_1–D_2 Max.	E Max.	Z Max.	S Max.	I Min.
CR-12 CR-25S	1/16,1/8,1/6W 1/4W	T-26	26± 1.0	5	6	0.8	1	1.2	1	3.2
		T-52	52± 2.0	5	6	0.8	1	1.2	1	3.2
CR-25 CR-33S CR-50S CR-100SS	1/4W 1/3W 1/2W 1W	T-26	26± 1.0	5	6	1.0	1	1.2	1	3.2
		T-52	52± 2.0	5	6	1.0	1	1.2	1	3.2
CR-50 CR-100S CR-200SS	1/2W 1W 2W	T-52	52± 2.0	5	6	1.2	1	1.2	1	3.2
CR-100 CR-200S	1W 2W	T-74	74± 2.0	5	6	1.4	1	1.2	1	3.2
CR-200 CR-300S	2W 3W	T-74	74± 2.0	10	6	1.4	1	1.2	1	3.2
CR-200B CR-300	2W 3W	T-74	74± 2.0	10	6	1.4	1	1.2	1	3.2

Figure5

Confidential, Do Not Disseminate.

7. CHARACTERISTICS

(1) Short Time Overload

Test Method : 2.5 times RCWV for 5 seconds

Acceptance Standard : ±(1%+0.05Ω)

(2) Insulation Resistance

Test Method : in V-Block

Acceptance Standard : .>1000MΩ

(3) Solderability

Test Method : 235℃ for 5±0.5 seconds

Acceptance Standard : 95% min. coverage

(4) Resistance to Solvent

Test Method : Trichroethane for 1 min. with ultrasonic

Acceptance Standard : no deterioration of coatings and marking

(5) Terminal Strength

Test Method : Direct load for 10 sec. in the direction of the terminal leads

Acceptance Standard :≥2.5kg (24.5N)

(6) Pulse Overload

Test Method : 4 times RCWV 10000 cycles (1 sec. on , 25 sec. off)

Acceptance Standard : ± (1%+0.05Ω)

Confidential, Do Not Disseminate.

(7) Load Life in Humidity

Test Method : 40±2℃ 90~95% RH at RCWV for 1000 hours.

(1.5 hrs. on , 0.5 hrs. off)

Acceptance Standard : ± (3%+0.05Ω)

(8) Load Life

Test Method : 70℃ at RCWV for 1000 hours.

(1.5 hrs. on , 0.5 hrs. off)

Acceptance Standard : ± (3%+0.05Ω)

(9) Temperature Cycling

Test Method : -65℃→room temp.→150℃→room temp.for 5 cycles

Acceptance Standard : ± (1%+0.05Ω)

(10) Resistance to Soldering Heat

Test Method : 350℃ ± 10℃ for 3±0.5 seconds

Acceptance Standard : ± (1%+0.05Ω)

- **Rated continuous Working Voltage (RCWV)**

$$= \sqrt{\textbf{power rating} \times \textbf{resistance value}}$$

8. COLOR CODING

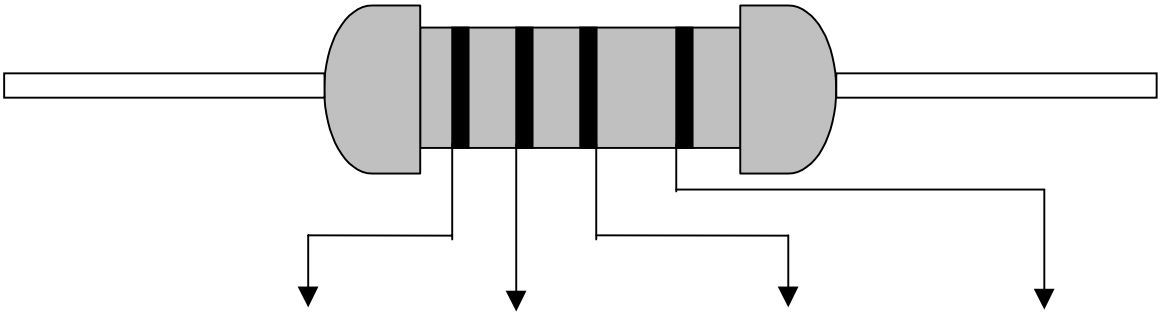

Color	1st, 2nd (Significant Figure)		3rd (Multiplier)	4th (Tolerance)
Black	0	0	10^0	—
Brown	1	1	10^1	F (± 1%)
Red	2	2	10^2	G (± 2%)
Orange	3	3	10^3	—
Yellow	4	4	10^4	—
Green	5	5	10^5	—
Blue	6	6	10^6	—
Violet	7	7	10^7	—
Gray	8	8	10^8	—
White	9	9	10^9	—
Gold	—	—	10^{-1}	J (± 5%)
Silver	—	—	10^{-2}	—

Figure6