Pomona®

Model 6343
Basic Electronic Test Lead Kit

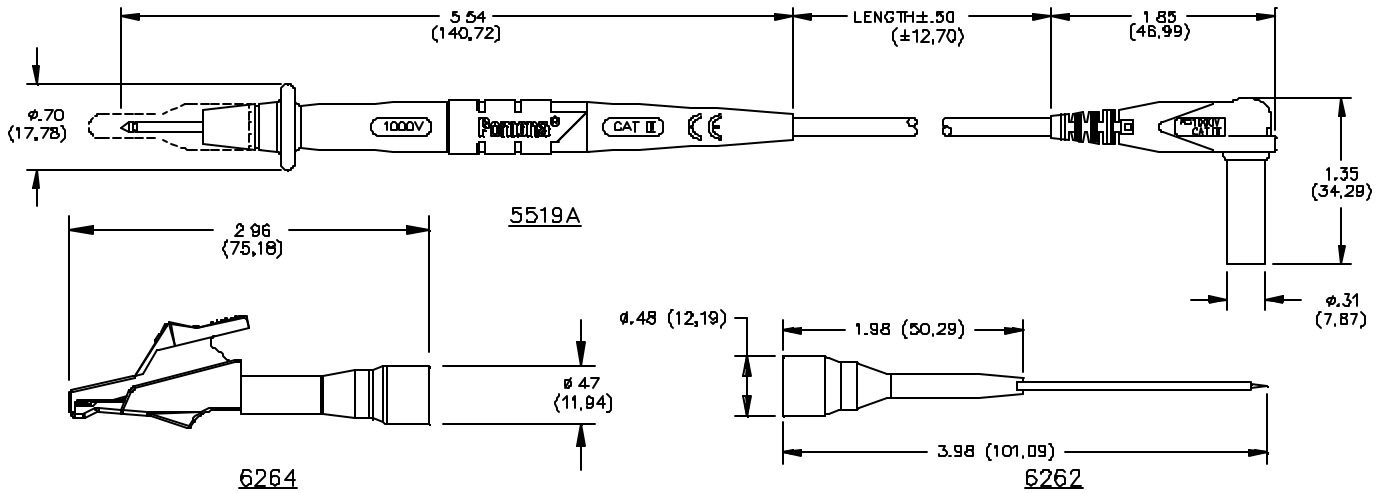

FEATURES:

- Test accessories comply with IEC 1010-2-031 and UL requirements
- Test clips with a right angle banana plug is ideal for use with hand held digital multi meter
- Extended slide on tip adapter fits directly over probe, allowing testing of hard to reach test points
- Compatible with most Fluke, H.P., Tektronic & Wavetek digital multimeters

MATERIALS:

Model **5519A**: Replacement Probes with Test Leads for Sheathed Style DMM's: Probe Body: Outer Insulation - Santoprene® Rubber, Color: Gray, Inner Insulation – Polypropylene, Fire Retardant Color: One Black, One Red, Tip: Nickel plated brass, Wire: 18 AWG, 65 x 36 Tinned Copper, Silicone Insulation, Length: 48” (122cm), O.D. .144" (3,66mm), Banana Plug: Body – Brass, Nickel Plated, Spring – Beryllium Copper, Nickel Plated, Insulation – PVC, Color: One Black, One Red, - **RATINGS:** 1000 VRMS/DC, 10 Amperes, CAT III, P2 Compliant

Model **6264**: Alligator Clip Adapter, Body – Steel, Nickel Plated, Insulation - Polypropylene
Spring: Music Wire, **RATINGS:** IEC 1010-2-031, Category II, P2, 300 VRMS/DC, Current: 5 Amperes.

Model **6262**: Extended tip adapter, Body: Polypropylene, Tip: Stainless Steel, Insulation: Kynar, **RATINGS:** IEC 1010-2-031, Category II, P2: 300 VRMS/DC, Current: 3 Amperes.

ORDERING INFORMATION: Model 6343 (Includes a kit of items from above)
Replacement P/N's: Model **6264:** Probe Adapter Alligator Tip, Model **6262**: Probe Adapter Extended Fine Tip, Model **5519A:** Probe to Right Angle DMM Plug.

All dimensions are in inches. Tolerances (except noted): .xx = ±.02” (,51 mm), .xxx = ± .005” (,127 mm).
All specifications are to the latest revisions. Specifications are subject to change without notice.
Registered trademarks are the property of their respective companies. Made in USA