Pomona®

Model 3781 & 5523 Kit
Minigrabber® Test Clip Patch Cord

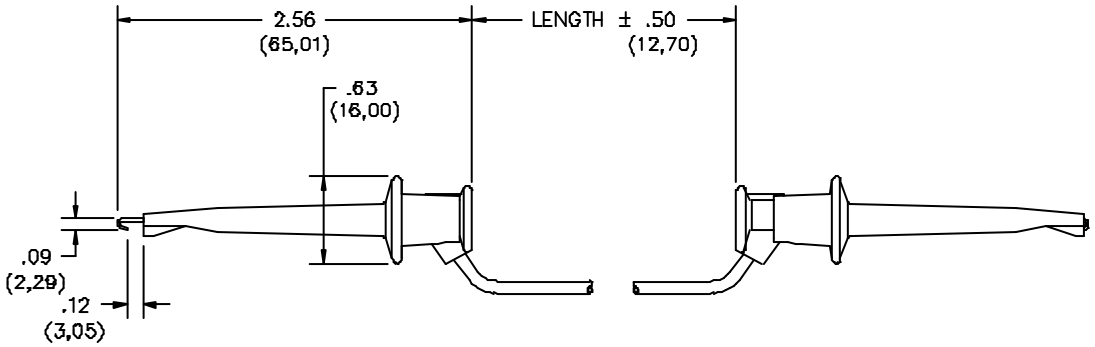

FEATURES:

- Ideal for providing temporary jumper wires.
- Provides excellent connector to terminals and wire wrap posts.

MATERIALS:

Minigrabber® Test Clip.

Material: Contact - Beryllium Copper
Spring – Stainless steel
Finish: Contact – Gold plated
Insulation: Glass filled nylon. Color matches color of wire.
Wire: 20 AWG, PVC insulated
Marking: "POMONA 3781-*"
Color: See Ordering Information.

RATINGS:

Operating Temperature: +102ºC. (+216ºF.) Max.
Voltage: Hand-held testing 30VAC/60VDC Max.
Hands free testing in controlled voltage environments 300 WVDC Max.
Current: 5 Amperes

ORDERING INFORMATION: Model 3781-XX-*

XX= Length in inches
*= Color, -0 Black, -2 Red, -1 Brown, -3 Orange, -4 Yellow, -5 Green, -6 Blue, -7 Violet, -8 Gray, -9 White.
Ordering Example: 3781-60-2 Indicates 60", color is red.

ORDERING INFORMATION: Model 5523 Kit

Kit containing 10 pieces of Model 3781-24, one of each color.

All dimensions are in inches and metric (m,m). All specifications are to the latest revisions. Specifications are subject to change without notice.
Registered trademarks are the property of their respective companies. Made in USA