Model 1825, 4897, 4899, 6545
Standard Banana Jacks, Solderless and Stackable

FEATURES:

- ✓ Designed to fit on the end of any 22 AWG to 18 AWG wire.
- ✓ Cross hole wire entry fits wires up to .12" (3mm) diameter
- ✓ Available with tarnish resistant nickel or gold plating for very low contact resistance
- ✓ Model 4899 is rated to temperatures up to +302°F (+150°C)
- ✓ Set screw simplifies assembly of test leads and jumpers by using a flat blade screwdriver
- ✓ Fits standard panel and binding post banana jacks .161" to .166" (4,0mm to 4,2mm) diameter

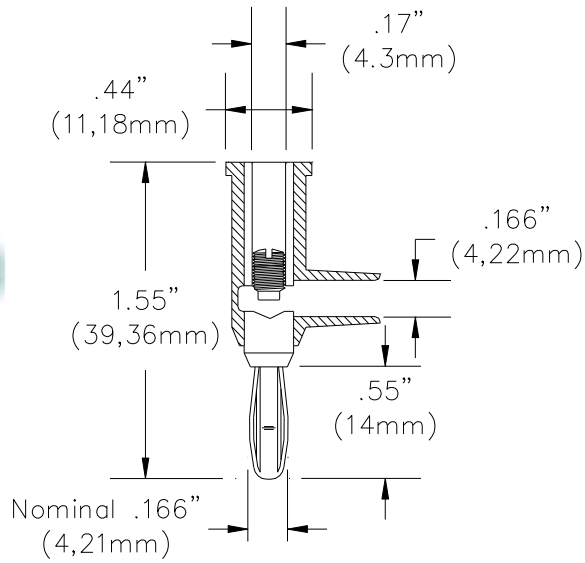

MATERIALS:

Banana Jack: Beryllium Copper, Gold Plated
Banana Plug: Body – Brass, Nickel Plated (Model 4897 Gold Plated)
Spring – Beryllium Copper, Nickel Plated (Model 4897 Gold Plated)
Insulation: ABS (Model 4899 Polyphenylene Sulfide)
Set Screw: Steel, Zinc Plated, 8-32 Single Slot

RATINGS:

Voltage: Hands free testing in controlled voltage environments: 5000 Vrms Max. *For CE compliance*: not intended for hand-held use at voltages above 33 Vrms/70 Vdc.
Current: 15 Amps
Maximum Operating Temperature: +122°F (+50°C). *Model 4899: +302°F (+150°C)*

ORDERING INFORMATION:

Model: 1825-***color*** Nickel Plated Banana with ABS Insulation
Color: 0=Black, 1=Brown, 2=Red, 3=Orange, 4=Yellow, 5=Green, 6=Blue, 7=Violet, 8=Gray, 9=White

Ordering example: 1825-5 (1825 with green ABS insulation)

Model: 6545 Package of ten 1825, one of each color.

Model: 4897-0 Gold Plated Banana Plug with ABS Black Insulation
Model: 5897-2 Gold Plated Banana Plug with ABS Red Insulation

Model: 4899-0 Nickel Plated Banana with High Temperature Black Insulation (Polyphenylene Sulfide)
Model: 4899-6 Nickel Plated Banana with High Temperature Blue Insulation (Polyphenylene Sulfide)

Model: 4914 Replacement Set Screws, package of 100.

All dimensions are in inches. Tolerances (except noted): .xx = ±.02" (,51 mm), .xxx = ± .005" (,127 mm).
All specifications are to the latest revisions. Specifications are subject to change without notice.
Registered trademarks are the property of their respective companies.